Do not scale off drawing.
All dimensions to be checked on site by Contractor.
Any errors or discrepancies to be reported to the Contract Supervisor.

TRANSPORTATION CONFIGURATION

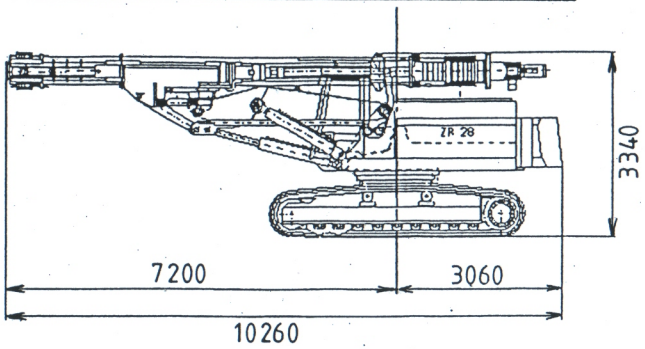

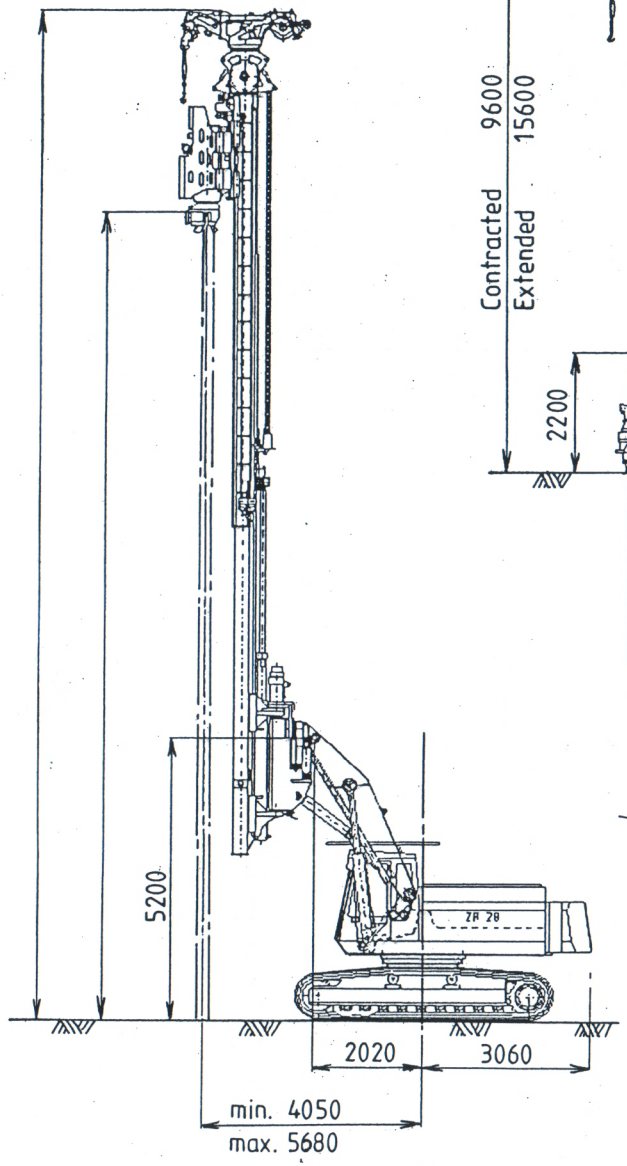

PILE DRIVING

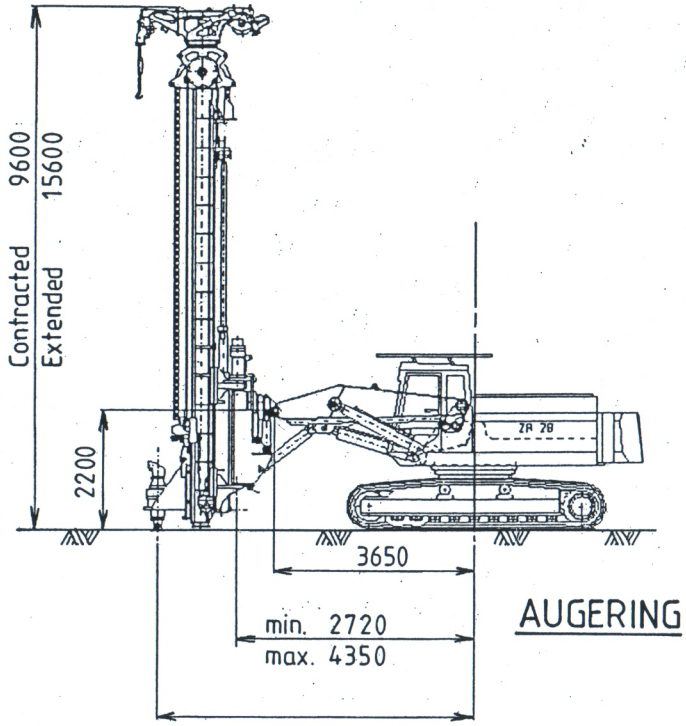

AUGERING

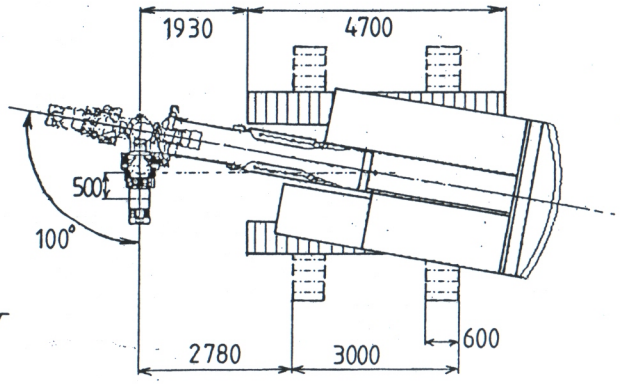

WEIGHTS

Weight of carrier ZR 28T R35 (inc. additional counterweight)	30500 kg
Weight of main Leader Assembly, Main Boom, Cylinders & 5te aux. Winch	11800 kg
Weight of MRZV 600V Vibrohammer	3000 kg
Weight of Auger Drive Motor EGB 3100 with adaptor	1250 kg
TOTAL WEIGHT : PILE DRIVING	45300 kg
TOTAL WEIGHT : AUGERING	43550 kg

GROUND BEARING PRESSURES / PILING PLATFORM REQUIREMENTS

'L' = Maximum Ground Pressures
(in accordance with EN 996 Annex B)
NB/ Triangular Loading Distribution.

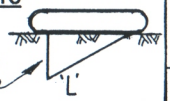

1. Travelling : 'L' = 307 kN/m²
2. Pile Driving : 'L' = 367 kN/m²
3. Pre-Augering : 'L' = 365 kN/m²
4. 5te Winch : 'L' = 479 kN/m²

Piling Working Platforms to be designed in Accordance with BRE Document ***'Working Platforms' for Tracked Plant'***, for the appropriate loadings given above.

C	
B	
A	

SHEET PILING (UK) LTD

client

project: ABI : LEADER RIG (15m)

drawing: DETAILS.

drawn	date	scale
GAP		1:100 (A3)

dwg.no	revision
SP-UK/ABI/01	A