NOTES

1. See also SPUK Method Statement.
   See also SPUK Design Report.
2. Setting out by others.
3. See also SPUK Drawing E14307/GA/01

| HWL on Capping | ULS = 57 kN/m |
|---|---|
| | SLS = 41 kN/m |

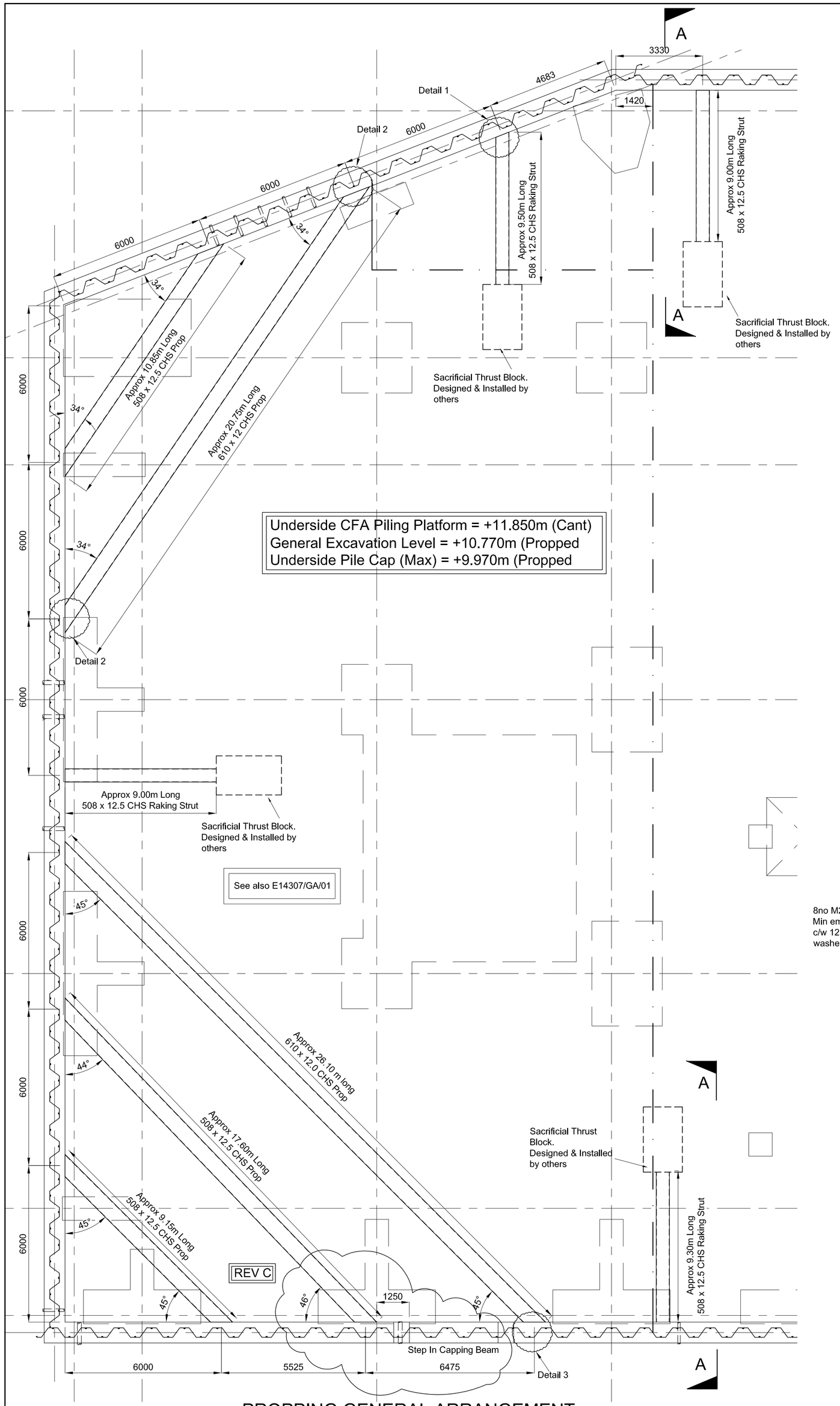


PROPPING GENERAL ARRANGEMENT
Scale 1:100

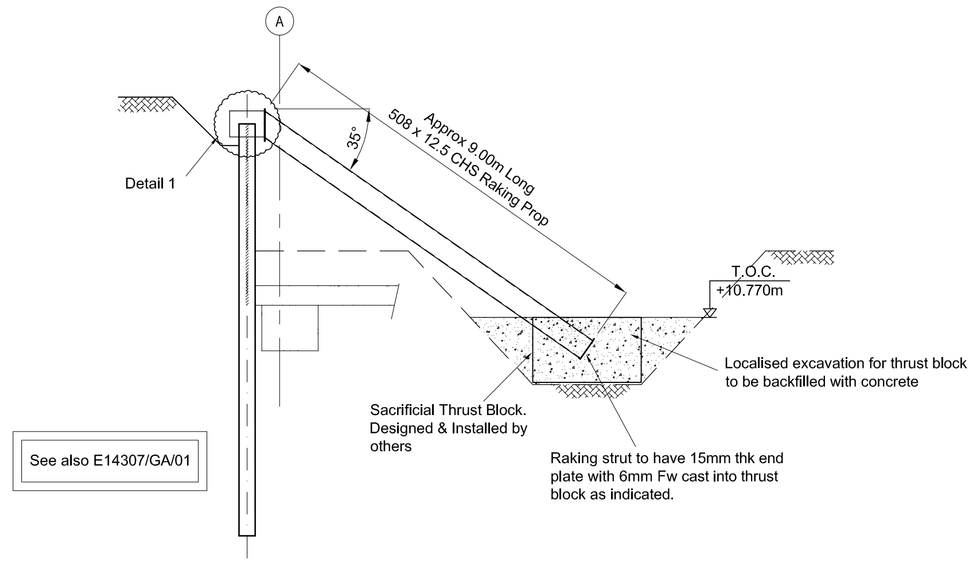


SECTION A-A
Scale 1:100

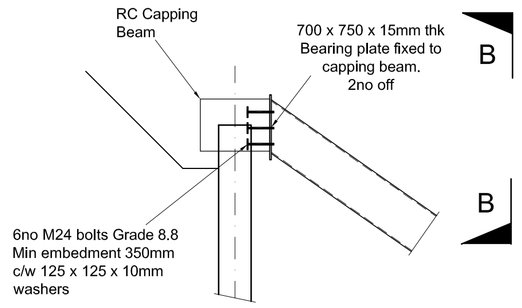


DETAIL 1
Scale 1:50

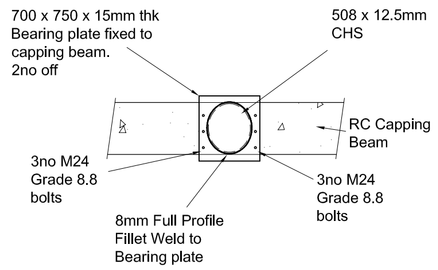


ELEVATION B-B
Scale 1:50

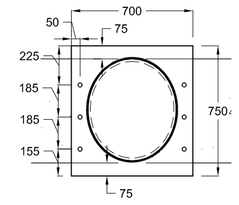


END PLATE DETAIL 1
Scale 1:25 - 4no Required

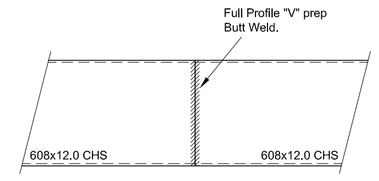


TYPICAL SPLICE DETAIL
Scale 1:25

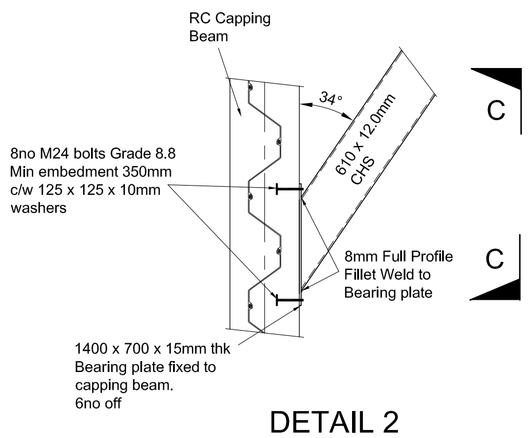


DETAIL 2
Scale 1:50

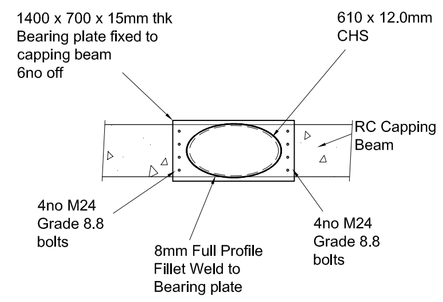


ELEVATION C-C
Scale 1:50

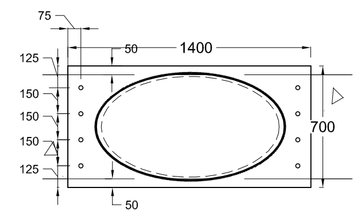


END PLATE DETAIL 2
Scale 1:25 - 4no Required

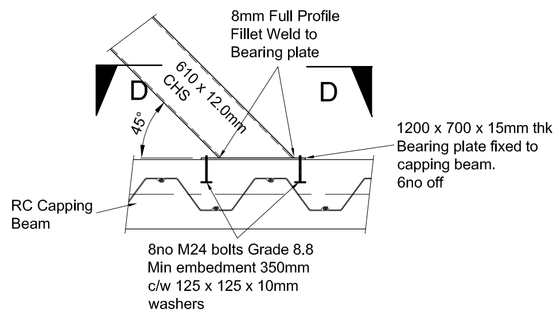


DETAIL 3
Scale 1:50

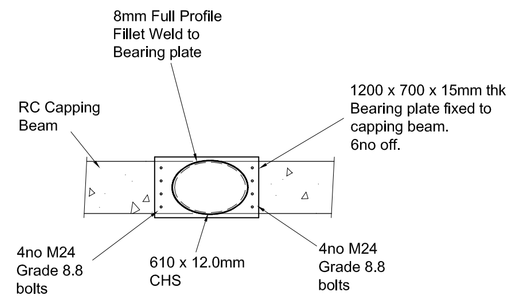


ELEVATION D-D
Scale 1:50

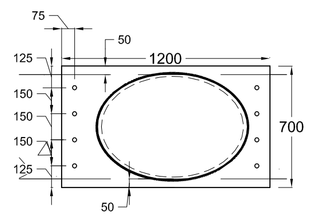


END PLATE DETAIL 3
Scale 1:25 - 6no Required.

| | | | |
|---|---|---|---|
| C3 | 15/04/15 | Revised Following Setting out of Capping Beam Step Down | SD |
| C2 | 16/03/15 | Revised Following Comments | SD |
| C1 | 12/03/15 | ISSUED FOR CONSTRUCTION | ES |
| P1 | 04/02/15 | FIRST ISSUE-FOR REVIEW | ES |

Client :
WATES CONSTRUCTION

Project :
No. 1 STATION ROAD,
CAMBRIDGE

Drawing Title :
SHEET PILE PROPPING
ARRANGEMENT & DETAILS

| FEB 2015 | Scale @ A1 : Shown | Drawn by : ES | Checked : |
|---|---|---|---|
| Original Size A1 | Drawing No. E14307/GA/02 | | Revision : C3 |


Oakfield House, Rough Hey Road,
Grimsargh, Preston. PR2 5AR
Telephone: 01772 794141
Facsimile: 01772 795151
E-Mail: enquiries@sheetpilinguk.com
Web: www.sheetpilinguk.com


SHEET PILING (UK) LTD