ABI

Your partner in civil engineering

●●● Pile Driving

●●● Extracting

●●● Augering

●●● Silent Piling

●●● with System

ABI MOBILRAM-SYSTEM TM 12/15

Applications for the ABI MOBILRAM-SYSTEM TM 12/15

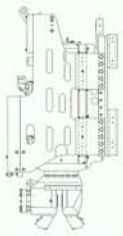

ABI Pile driving and extracting vibrator MRZV and MRZV-V
for installing and removing of
- sheet piles and trench sheetpiles
- steel beams and girders
- steel pipes / casings
- full displacement sections
- injection probes

ABI Auger drive MBA
for augering operations as e. g.
- ground release augering and augering for ground investigation
- augering for soldier pile installation
- displacement augering
- CFA piles
- injection and soil improvement for foundations

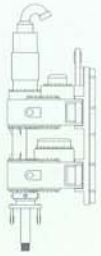

ABI Double auger head system VDW 3525
for auger / drilling operations as e. g.
- pile walls (counterfort type, tangential, secant and on - the - wall)
- augering cased for soldier pile installation
- well construction (dewatering)
- injection and soil improvement for foundations
- displacement augering

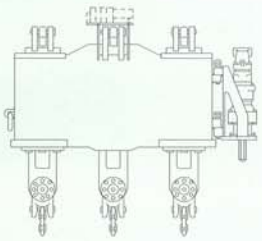

ABI HYDRO-PRESS-SYSTEM HP
for the vibration-free pushing and extracting of
- cold-rolled steel sheet pile sections with interlock

ABI HYDRO-PRESS-SYSTEM HPZ
for the vibration-free pushing and extracting of
- steel sheet pile Z - sections

ABI - Custom-made innovations

All stated figures are approximate values which may change.
Design subject to modifications.
03/98

ABI GmbH
Boschstraße 8
D-63843 Niedernberg
Tel. +49 (0) 60 28 / 97 23 -0
Fax +49 (0) 60 28 / 47 69
http://www.abi-gmbh.de
e-mail: info@abi-gmbh.de

ABI Pile driving and extracting vibrators

Technical Data		MRZV 600	MRZV 700	MRZV 800
Centrifugal force at max. frequency	kN	600	700	800
Static moment	kgm	8	10	12
Max. revolutions	min^{-1}	2.620	2.530	2.470
Required hydr. power at vibrator	kW	> 120	> 160	> 200
Dynamic weight*	kg	1.350	1.630	1.670
Total weight*	kg	2.300	2.690	2.730
Clamping force with standard jaw	kN	720	1.000	1.000
Maximum weight of pile elements	kg	1.500	1.800	2.000
Length* *L*	mm	2.115	2.460	2.460
Width *W*	mm	580	580	580
Depth *D*	mm	1.080	1.080	1.080

MRZV 600V	MRZV 800V	MRZV 925V
variable - static moment		
600	800	925
0 bis 8	0 bis 12	0 bis 16
2.620	2.470	2.300
>120	>200	>250
1.760	2.290	2.350
3.020	3.470	3.770
720	1.000	1.120
1.500	2.000	2.500
2.270	2.670	2.670
600	600	600
1.170	1.190	1.190

* including standard jaw assembly

MRZV

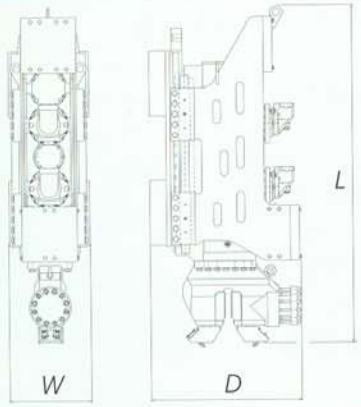

MRZV -V

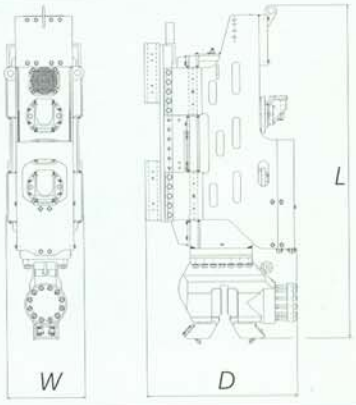

ABI Auger drives

Technical Data		MBA 3100
Torque	daNm	3.100
Hexagon connection*	mm	80
Max. oil pressure	bar	300
Max. oil quantity	l/min^{-1}	360
Required oil quantity per rotation	l/rot.	7,5
Max. revolutions	min^{-1}	48
Max. auger diameter	mm	1.000
Total weight	kg	930
Length L	mm	1.650
Width W	mm	700
Depth D	mm	1.000

* SW-M as socket / female

MBA

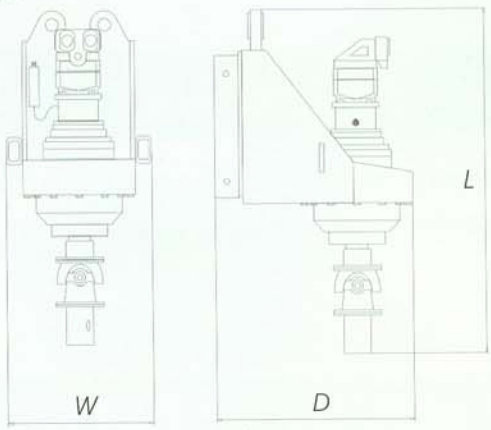

ABI Telescopic leader system

Technical Data			TM 12/15
Usable length			
with pile driving and extracting vibrator (depending on type)	mm	ca.	14.500
with auger drive	mm	ca.	15.000
Underground lowering depth	mm	ca.	3.000
Height - leader base set down, not telescoped, main boom in lowest position	mm	ca.	9.500
Height - leader cylinders I and II extended main boom in highest position	mm	ca.	18.500
Winch assembly height	mm	ca.	750
Prestressing force Leader cylinder I	kN	max.	70
Prestressing force Leader cylinder II	kN	max.	90
Extraction force Leader cylinder I	kN	max.	140
Extraction force Leader cylinder II	kN	max.	175
Torque absorption	daNm	max.	3.100
Lifting capacity Auxiliary winch	kN	max.	50
Leader inclination front/rear	degree	max.	±4°
Leader inclination laterally	degree	max.	±4°
Leader inclination transport position	degree	max.	- 90°
Leader slewing range	degree	max.	±100°
Attachment weight incl. main boom and main boom cylinder	kg	ca.	10.500
Assembly weight Auxiliary winch	kg	ca.	750
Weight of piling equipment without attachment depending on carrier unit	t	ca.	40 to 45
Transport dimensions			
Length L	mm	ca.	10.500
Width	mm	ca.	3.000
Height H	mm	ca.	3.350
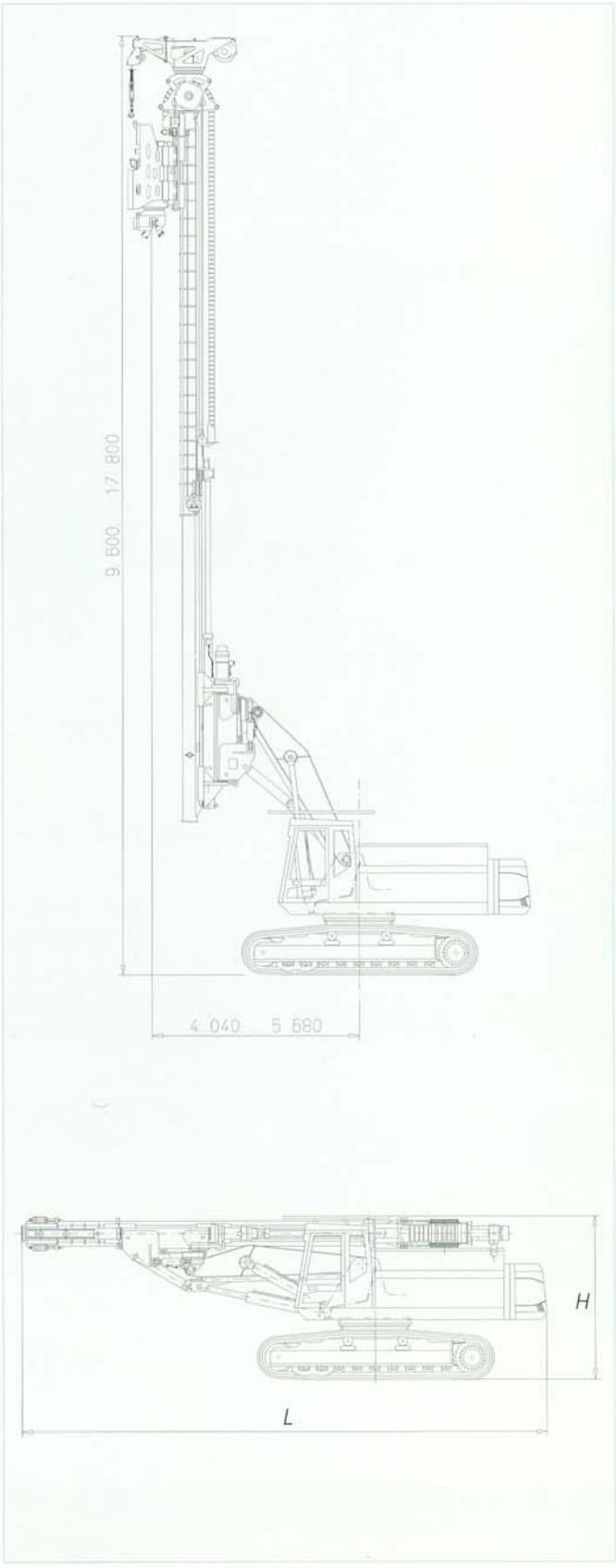
All stated figures are approx. values which may change depending on the carrier type.