NOTES :

1. See also Job Specific Method Statement.
2. Super Jet Reel not shown.
3. See also SP.UK drg GIKEN/UP150/02 for Reaction Stand Details.

GIKEN UP.150 - SPECIFICATIONS		
Max. Press-in Force	=	1500 kN
Max. Extraction Force	=	1600 kN
Weight (UP150 only)	=	9400 kg
Weight (Super Jet Reel)	=	620 kg
Total Machine Weight	=	10020 kg

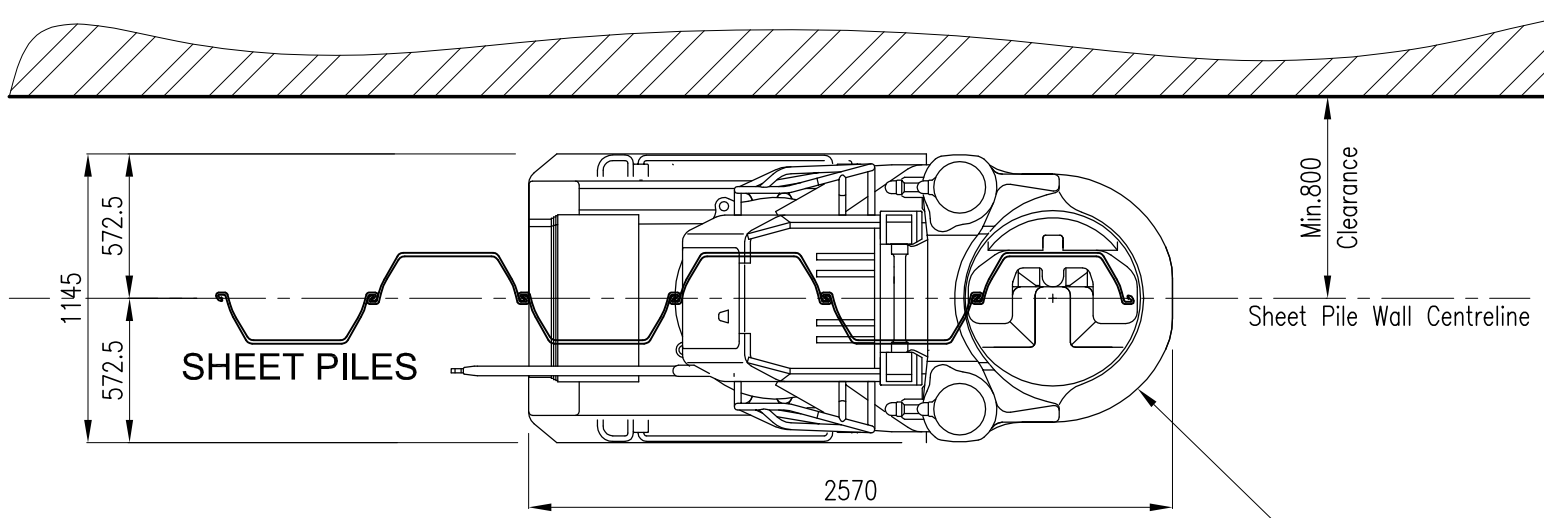

PLAN

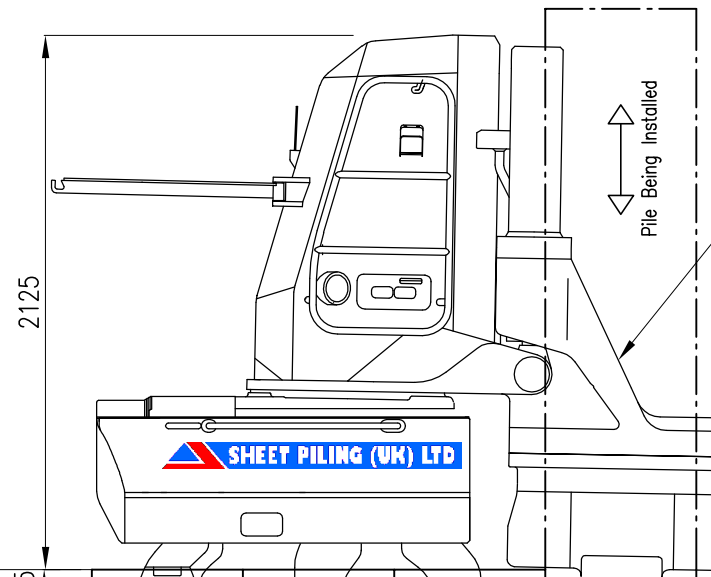

GIKEN UP.150
Hydraulic Pile
Press

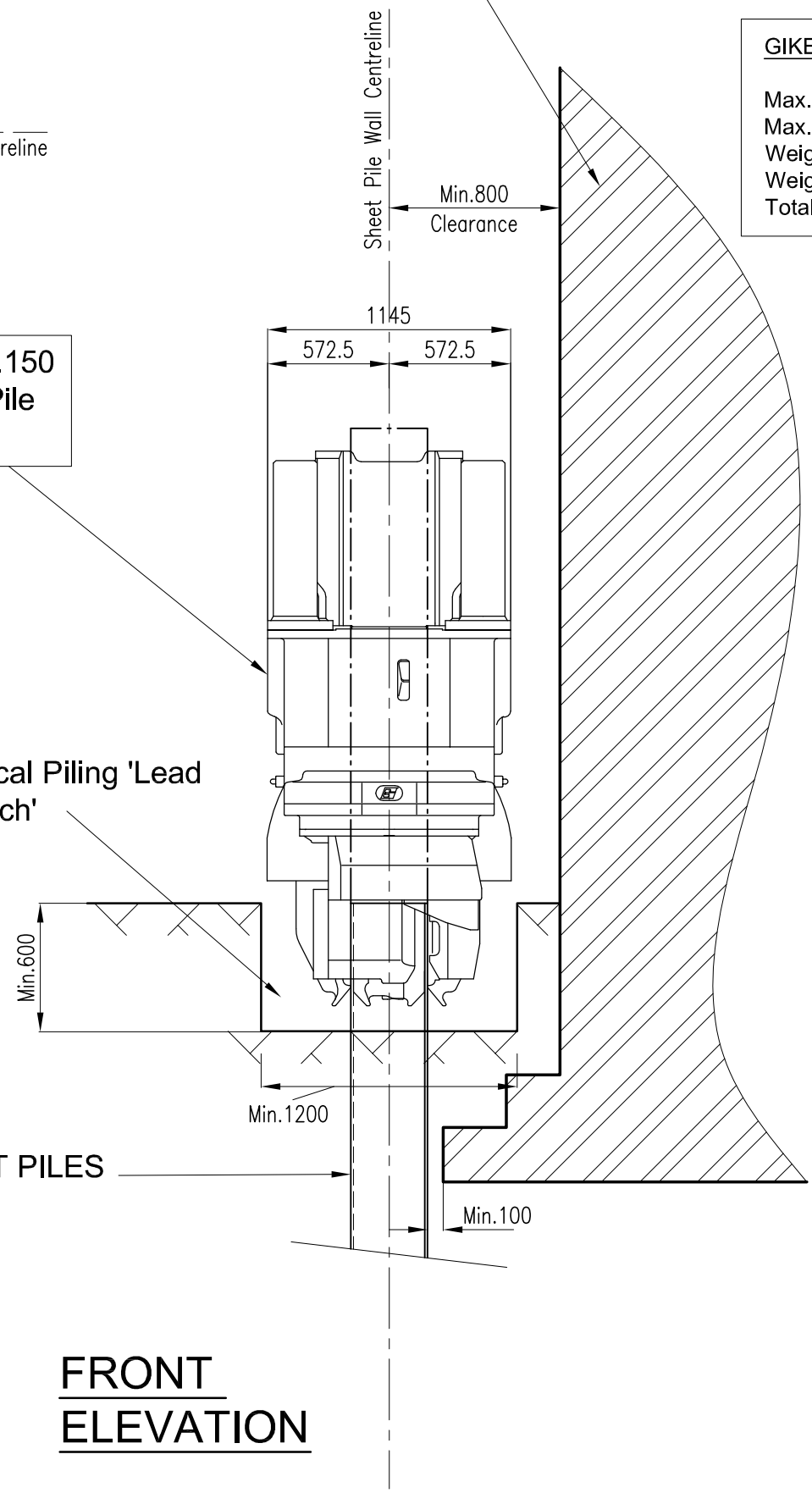

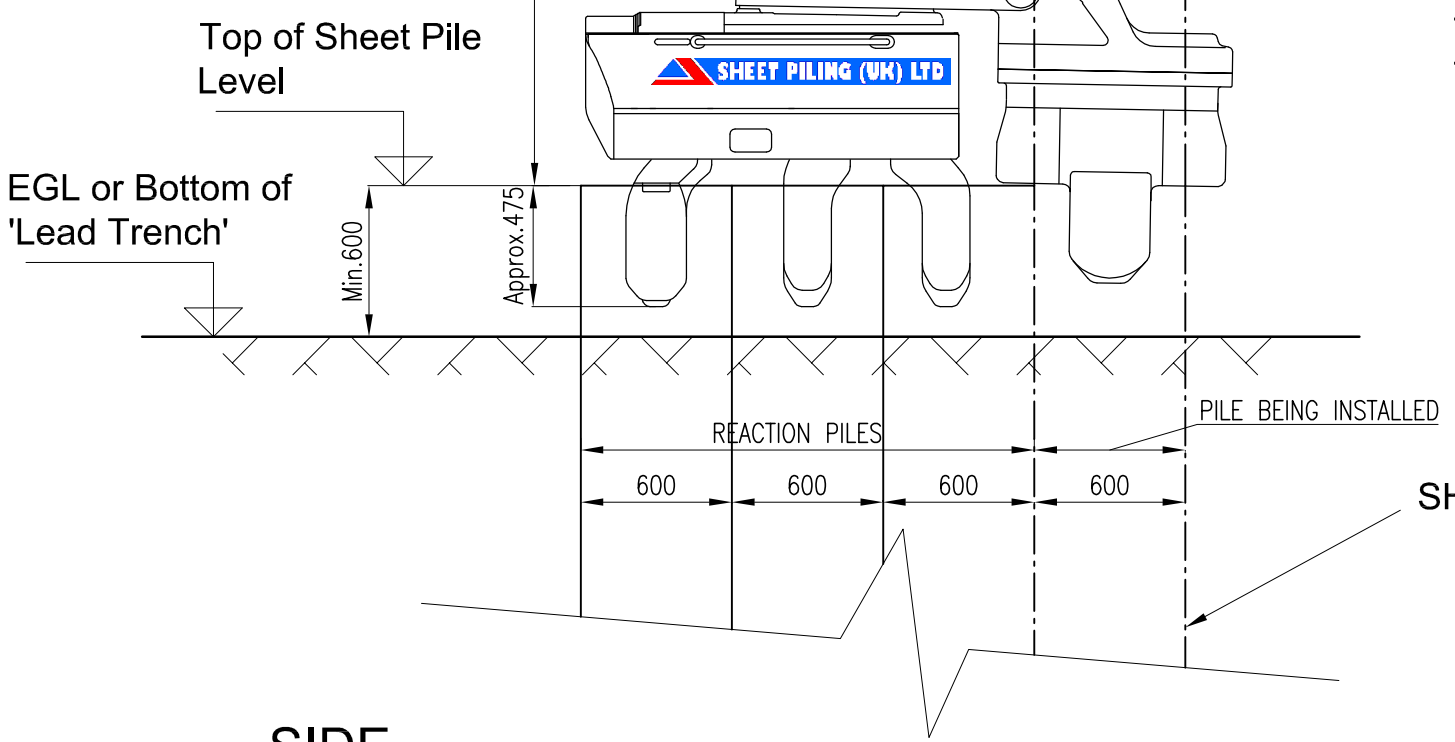

SIDE
ELEVATION

FRONT
ELEVATION

C		
B		
A		

SHEET PILING (UK) LTD

Oakfield House, Rough Hey Rd.
Grimsargh. Preston. PR2 5AR.
Tel : 01772 794 141
Fax : 01772 795 151
email : enquiries@sheetpilinguk.com
Web : www.sheetpilinguk.com

client :

project : GIKEN UP150 HYDRAULIC PILE PRESS

drawing : GENERAL DETAILS AND CLEARANCES

drawn :	date :	scale :
G. A. Potts	14 Sept. 2009	NTS

drg. no.	rev.
GIKEN/UP150/01	B