SHEET PILING (UK) LTD	CALCULATION SHEET		
Oakfield House, Rough Hey Road, Grimsargh, Preston. PR2 5AR Telephone: 01772 794141 Facsimile: 01772 795151 e-mail: enquiries@sheetpilinguk.com web: www.sheetpilinguk.com	Contract : NOTTINGLEY. SHEET PILING.	Sheet No.: No. of Sheets :	
Original : / Rev. :	Drawing No.:	Title : TEMPORARY WORKS	Date : 09/16.
Design by : G.A.Potts.	Date :	Checked by :	Date :

NOTES.

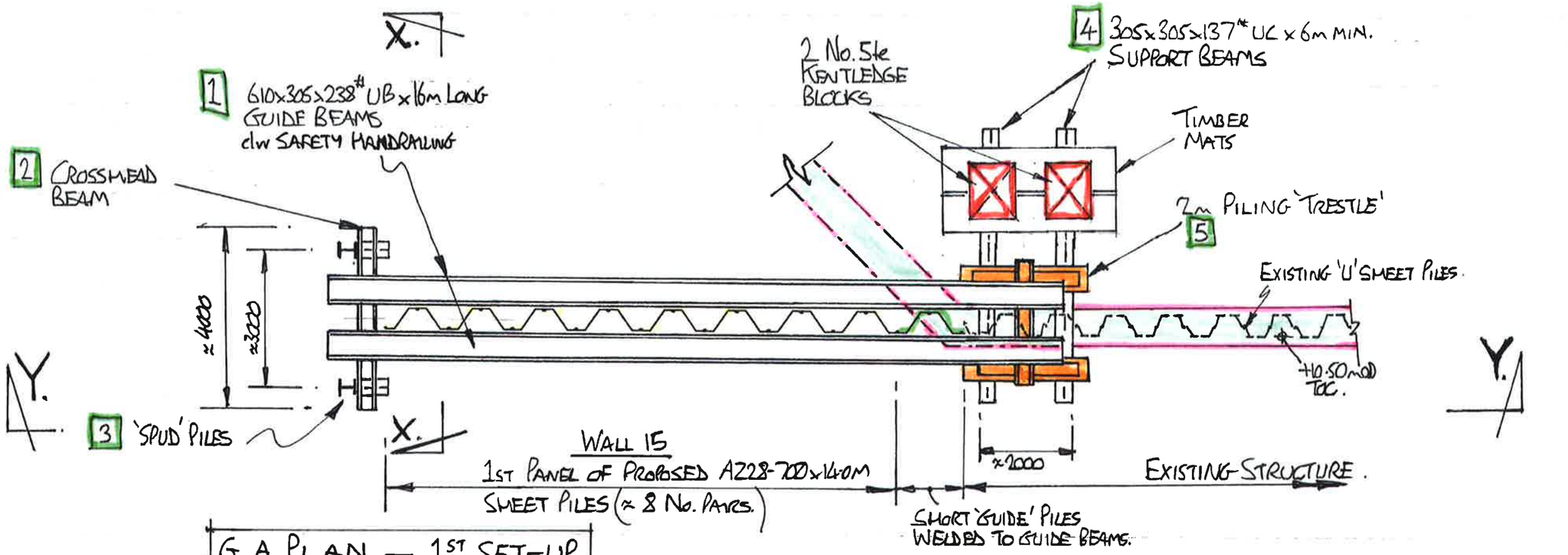

G.A.PLAN — 1ST SET-UP.
1:100 @ A3

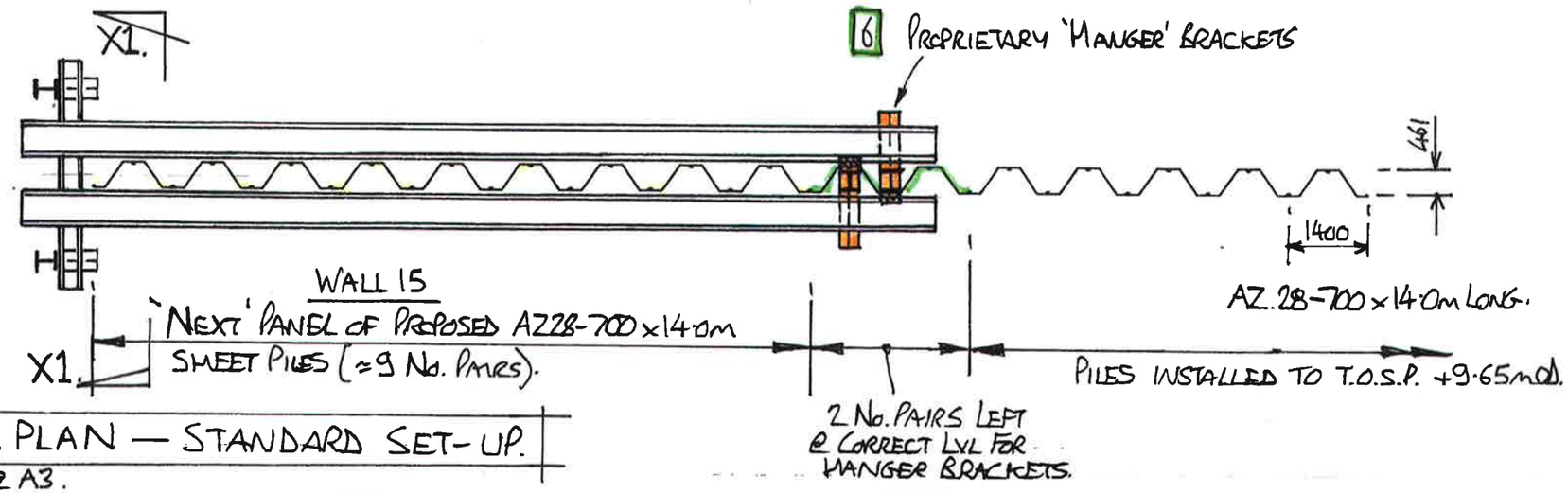

G. A. PLAN — STANDARD SET-UP.
1:100 @ A3.

SHEET PILING (UK) LTD
Oakfield House, Rough Hey Road,
Grimsargh, Preston. PR2 5AR
Telephone: 01772 794141
Facsimile: 01772 795151
e-mail: enquiries@sheetpilinguk.com
web: www.sheetpilinguk.com

CALCULATION SHEET

Contract : NOTTINGLEY. SHEET PILING.		Sheet No.:	
		No. of Sheets :	
Original :	Rev. :	Drawing No.:	Title : TEMPORARY WORKS
Date : 1/09/16.			
Design by : G.A. Potts	Date :	Checked by :	Date :

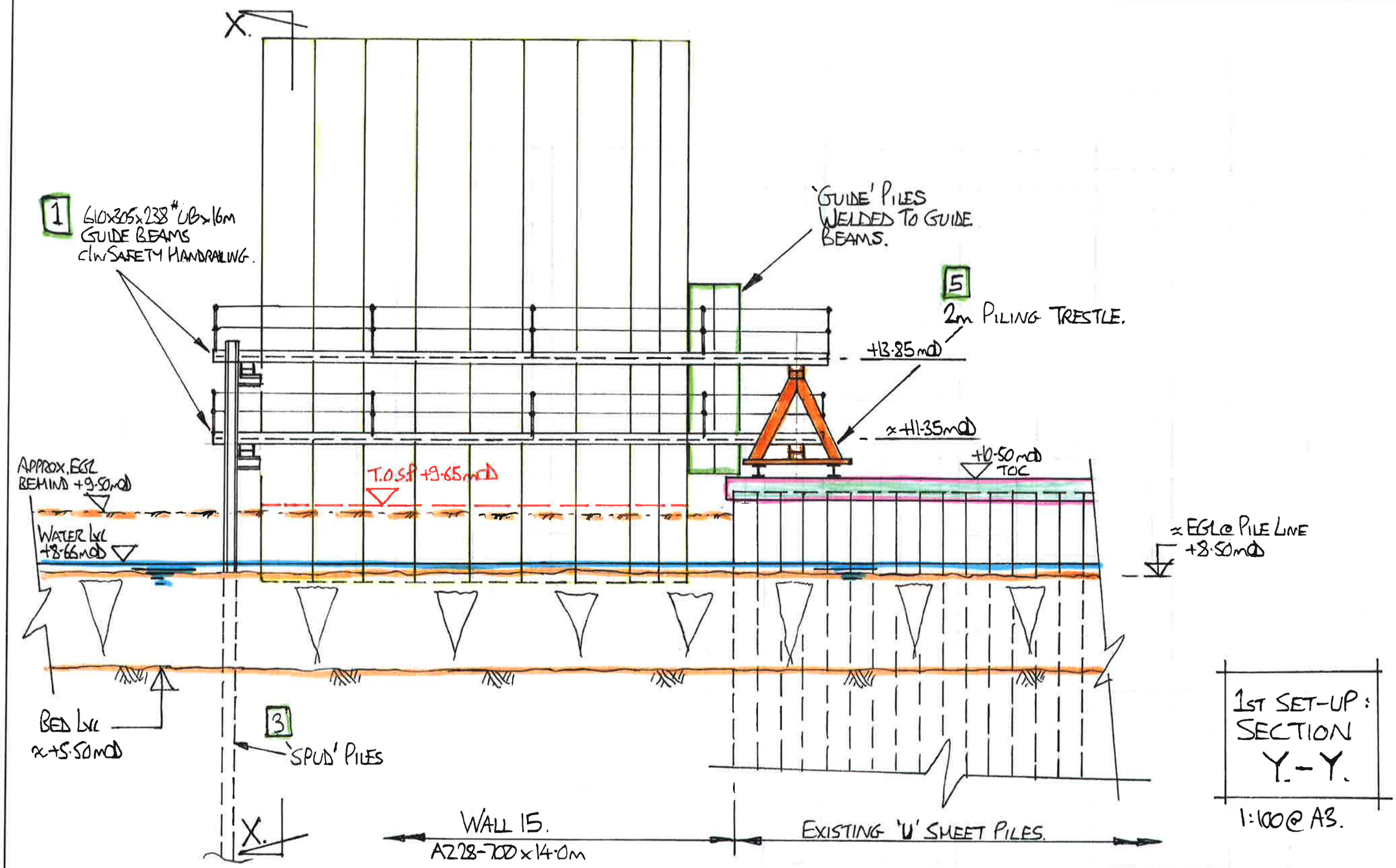

1ST SET-UP :
SECTION
Y.-Y.

1:100 @ A3.

SHEET PILING (UK) LTD
Oakfield House, Rough Hey Road,
Grimsargh, Preston. PR2 5AR
Telephone: 01772 794141
Facsimile: 01772 795151
e-mail: enquiries@sheetpilinguk.com
web: www.sheetpilinguk.com

CALCULATION SHEET

Contract : NOTTINGLEY SHEET PILING		Sheet No.:	
		No. of Sheets :	
Original :	Rev. :	Drawing No.:	Title : TEMPORARY WORKS
Date : 1/09/16			
Design by : G.A. Potts.	Date :	Checked by :	Date :

NOTES.

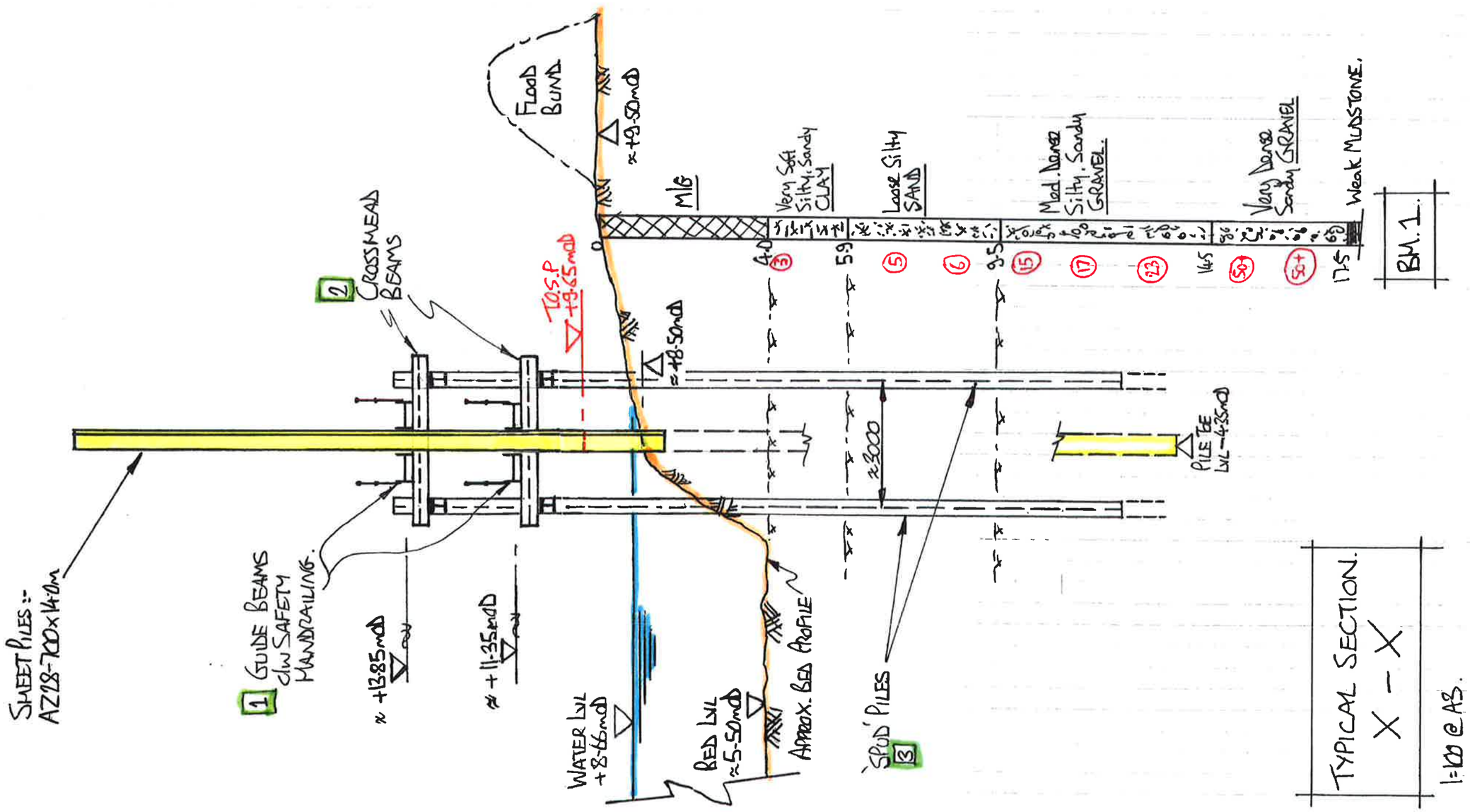

SHEET PILING (UK) LTD	CALCULATION SHEET			
Oakfield House, Rough Hey Road, Grimsargh, Preston. PR2 5AR Telephone: 01772 794141 Facsimile: 01772 795151 e-mail: enquiries@sheetpilinguk.com web: www.sheetpilinguk.com	Contract : NOTTINGLEY SHEET PILING		Sheet No.:	NOTES.
			No. of Sheets :	
Original :	Rev. :	Drawing No.:	Title : TEMPORARY WORKS	Date : 1/09/16
Design by : G.A. Potts.	Date :	Checked by :		Date :

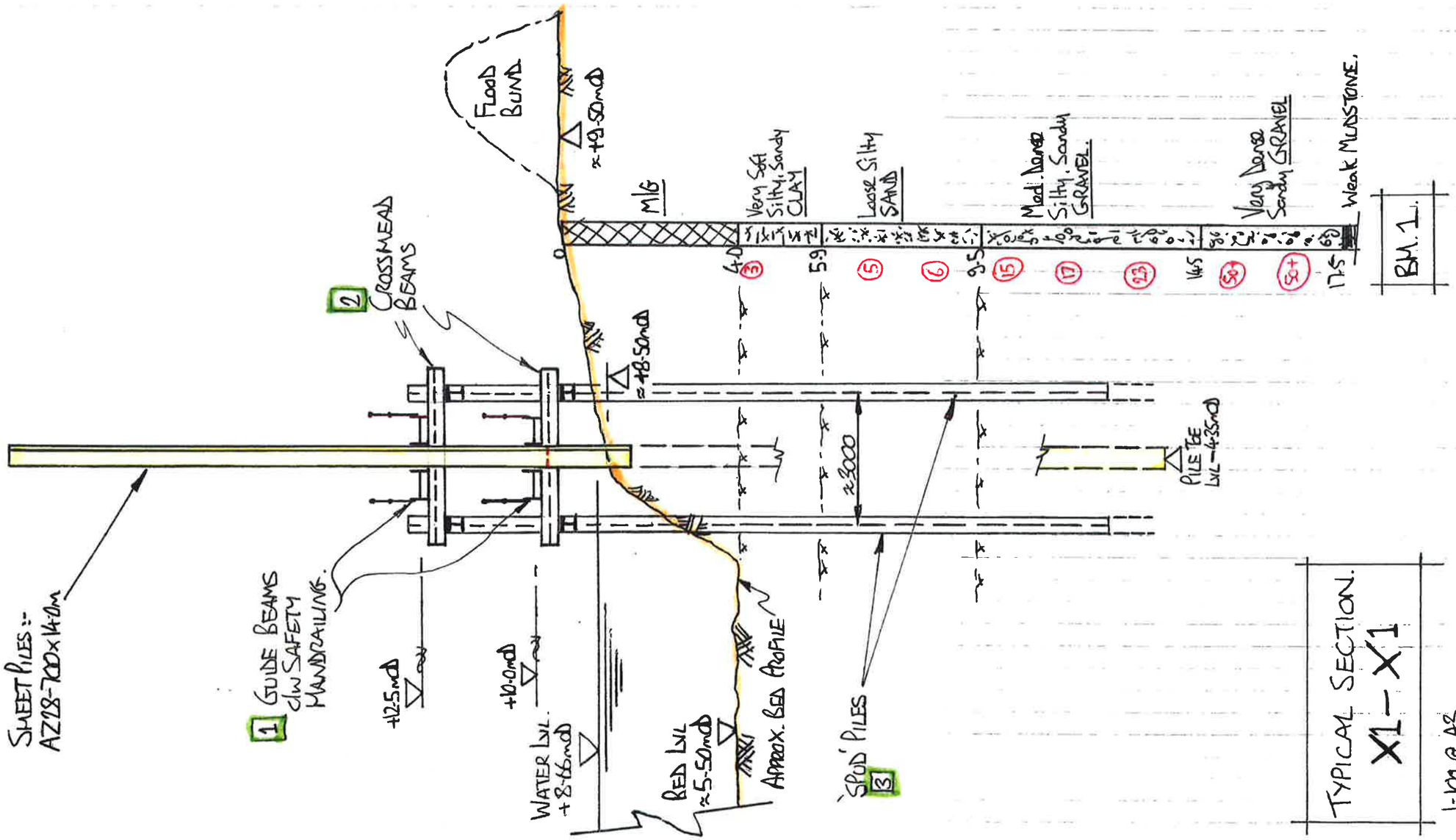

TYPICAL SECTION.
X1 – X1
1:100 @ A3.