Product Design Theory and Basic Engineering Properties

A CMI Technical White Paper

Michael Yeats
February 2004

Product Design Theory and Basic Engineering Properties

CMI is constantly introducing new products as low cost solutions to our customer's needs. Every new and existing product is scrutinized extensively by our engineering personnel to ensure that they will meet and exceed the performance standards our customer's desire.

CMI's detailed engineering design program, in conjunction with extensive analytical, field and experimental performance results, provide peace of mind for our customers in knowing that we have thoroughly evaluated and proven the performance of all of our products.

CMI continues to provide sheet piling design innovations through extensive research and development, and relies on a world-class engineering team to establish material capabilities as well as the interaction of stresses experienced in the finished product. It is of paramount importance that all factors of the products performance are analyzed carefully. And although it is relatively simple to determine the moment capacity of a sheet piling relying solely on coupon tests and simple engineering calculations, this type of analysis can provide misleadingly high results.

Our products are not only designed with a simplified theoretical overall bending strength, but all aspects of cross sectional loading and buckling as well as ancillary stresses and deformations are analyzed and tested by advanced computer modeling and Finite Element Analysis techniques by both internal and third party engineers.

Finally, finished product performance is proven through extensive internal and third party testing of both material coupon cut outs, and full length full product sections.

- *Finite Element Assessment of Two Interlocking PVC Sheet Piling Designs* by The Ohio State University
- *C-Loc Sheet Piling FEA Analysis* by Product Design Center
- *Full Section Deflection Testing of Sheet Piling* by Crane Component Company
- *Evaluation of Deflection of Sheet Piling* by the Ohio Department of Transportation
- *Flexural Modulus Evaluation* by FTI/SEA Consulting
- *Evaluation of ShoreGuard Rigid Vinyl Sheet Piling* by BF Goodrich Company
- *Strength Evaluation of Sheet Piling* by Science Applications International Corporation
- *Deflection Analysis of ShoreGuard Sheet Piling* by Materials International
- *16-year Creep Study of PVC* by Brown University
- *U.S. Army Corp of Engineers, CMB Report 02-008, Results of Vinyl Sheet Pile Materials Investigation for New Orleans District* by Joe G Tom and Judy C. Tom
- *1,000 hour QUV Test (ASTM G53-96)* by the Illinois Department of Transportation, Bureau of Materials and Physical Research
- *Physical Property Retention - 5 Year Weathering Study* by BF Goodrich., Cleveland, OH
- *Evaluation of BF Goodrich Geon Vinyl for Use in Plastic Sheet Piling System* by BF Goodrich Company, Advanced Engineering and Design Laboratory

Stress, Strain and Modulus

The structural performance of all materials is primarily controlled by two main factors:

Stress (σ) – Applied force over a given area. Usually given in pounds per square inch (psi), or pascals (Pa)
Strain (ε) – The amount of deformation or stretch of a material. Usually given in inch per inch (in/in) or percentage (%)

Stress and strain for isotropic materials are related by Hooke's law:

$$\frac{\sigma}{\varepsilon} = E$$

Where E is the modulus of elasticity and usually given in pounds per square inch or pascals.

Therefore E is a number that describes the amount of stress required for a unit elongation, or more simply put the

4501 Circle 75 Parkway, Suite E-5370 Atlanta, GA 30339 USA Phone 866-867-3762 Fax 770-933-8363 International 00+1+770+933+8166

stiffness of a material.

The maximum amount of stress or strain a material can with stand before failure are known as:

Ultimate Stress (σ_{ult})
Ultimate Strain (ε_{ult})

E, $\sigma_{ult,}$ and ε_{ult} are material properties only and are not controlled whatsoever by cross sectional or other shape parameters.

Moment of Inertia

The bending performance of a particular beam is largely controlled by a cross section property known as the second moment of area or more commonly known as the moment of inertia (I).

The moment of inertia is based solely on the shape of a cross-section, or area, and not controlled whatsoever by material properties.

Moment of inertia is calculated as follows:

$$I_x = \int_A y^2 dA$$

Where the moment of inertia of area A is calculated about axis x.

The units for moment of inertia are most commonly inches to the power of four (in^4), or millimeters to the power of four (mm^4)

Bending Moment

When a component is subjected to beam loading (i.e. the loading is applied perpendicular to the components longitudinal axis), there is an occurrence known as a bending moment induced in the beam. The induced bending moment is a factor of the supporting and loading conditions only and not material properties or beam cross-section, and varies through the length of the beam.

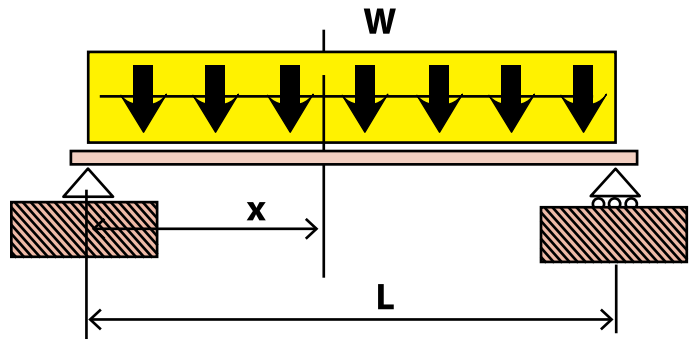

Figure 1
Simply Supported Beam with Uniformly Distributed Load

The loading configuration of a sheet piling wall is extremely complicated, therefore for this section we will examine more simplified loading cases for illustration purposes. Please refer to ***Fundamentals of Wall Design*, a CMI White Paper** for more detailed information on sheet piling loading configurations.

For a simply supported beam with a uniformly distributed load (Figure 1), the maximum bending moment occurs at mid

$$M_{\max} = \frac{wL^2}{8}$$

span and can be calculated as follows.
Where M_{max} is the maximum moment, w is the distributed load, and L is the span. Bending moment can be visualized as a forced applied at a distance or moment arm and is usually reported in foot pounds (ft-lbs) or newton meters (N-m).

Bending Stress

The bending stresses induced in the cross section of the beam are primarily tensile stresses in the bottom section reaching a maximum at the bottom edge, and compressive stresses in the top section reaching a maximum at the top edge. The bending stresses can be calculated as follows:

$$\sigma = \frac{My}{I}$$

4501 Circle 75 Parkway, Suite E-5370 Atlanta, GA 30339 USA Phone 866-867-3762 Fax 770-933-8363 International 00+1+770+933+8166

Where y is the distance of the stress element from the neutral axis of the cross section.

To calculate the maximum bending stress, y is replaced by the distance from the neautral axis to the outside edge of the cross section (c).

$$\sigma_{max} = \frac{Mc}{I}$$

For a symmetric cross section, c can be assumed to be half of the cross section depth.

In order to simplify calculation the previous equation can be replaced by:

$$\sigma_{max} = \frac{M}{Z}$$

Where Z is known as the Section modulus, and, for a

$$Z = \frac{I}{c}$$

semetric cross section:

Section modulus is usually reported in inches cubed (in^3) or milimeters cubed (mm^3), and is a shape property only.

Deflection

The deflection of a beam is principally a function of the moment of inertia of the beam cross section, and the modulus of elasticity of the beam material. Generally speaking, the higher the moment of inertia and modulus of elasticity of a particular beam, the lower the deflection and therefore stiffer the beam will be in bending.

For the situation noted in Figure 1 in the bending moment section, the maximum deflection will occur at the center of the span and can be calculated as follows:

$$\Delta_{max} = \frac{5wL^4}{384EI}$$

Where Δ_{max} is the maximum deflection usually reported in inches (in) or millimeters (mm).

4501 Circle 75 Parkway, Suite E-5370 Atlanta, GA 30339 USA Phone 866-867-3762 Fax 770-933-8363 International 00+1+770+933+8166

Design Stress for Vinyl Sheet Pile

A CMI Technical White Paper

Ben Brown
November 2006

Design Stress for Vinyl Sheet Pile

Vinyl has been a staple in the construction industry for over 50 years. Due to its strength, light weight, and corrosion resistance, Vinyl has long been a clear favorite for piping applications. It is now seeing increasing use in structural applications. But unlike steel, aluminum, and wood, no standard structural design codes currently exist. This lack of a governing design body has lead to inconsistent design methods, general confusion, and manipulation in the industry. Vinyl is not a mystical material. Vinyl sheet piling structures should be designed with the same methodology used for any construction component *(see How to Design with Vinyl Sheet Pile)*.

In the vinyl sheet piling industry, the topics of safety factor in product selection, and design stress in general, are often overlooked. Currently, many people are relying on manufacturers to give them a design stress value, or worse yet, simply the overall bending capacity of the sheet itself. While seeking advice from manufacturers is encouraged, some manufacturers take this opportunity to manipulate the design stress value to best suit their interests at the expense of the designer or end user who is unaware. Many times high design stress values are used, minimizing the factor of safety, to give the perception of increased strength with no physical change. Other times, different design stress values are used for the same material to give the appearance of a broader product range. When these things occur, the design stress values may be hidden or hard to find (see *Structural Comparison and Selection of Vinyl Sheet Piling)*. This paper will aid the designer in establishing the proper design stress. Once this value has been established, it should be used for all products being evaluated.

Factor of Safety and Design Stress

When designing any sheet pile wall, (see *Detailed Engineering Analysis of a Sheet Pile Structure*) two qualities, shape properties and material characteristics, are used to calculate an appropriate sheet for a project. A sheet's various shape properties are determined solely by the geometry of the profile and combined into one design value, Section Modulus. Material properties can be more challenging to quantify due to their inevitable inconsistencies. Unlike Section Modulus which is entirely objective, design stress is determined by taking the maximum stress a material can withstand before failure and applying a chosen level of safety.

Safety factors are always applied in the construction and

$$\frac{\textit{Max Stress Value}}{\textit{Factor of Safety}} = \textit{Design Stress}$$

Equation 1- design stress calculation

$$\frac{30{,}000\ psi}{2} = 15{,}000\ psi$$

Example 1- design stress calculation

engineering industry in this fashion to account for the unknown and to provide added safety in the design. It is the sole responsibility of the wall designer to choose an appropriate safety factor for the project.

Although no official governing codes exist, the US Army Corps of Engineers has long been the leader in sheet pile wall designs and installations. They designate a minimum safety factor of 2 for bending calculations of steel sheet piling (see USACE Publication EM 1110-2-2504, Design of Sheet Pile Walls, section 6-3, Design of sheet piling). At the very least, the same safety factor is recommended for all vinyl sheet pile products. But again, this decision should ultimately be made by the wall's designer.

Establishing a Design Stress for Vinyl Sheet Piling

The minimum tensile strength of Vinyl for use in a building product is designated by its ASTM cell classification (see Cell Class for Vinyl Sheet Pile Materials). This is the only stress value that should be used in the design of vinyl sheet piling.

4501 Circle 75 Parkway, Suite E-5370 Atlanta, GA 30339 USA Phone 866-867-3762 Fax 770-933-8363 International 00+1+770+933+8166

Design Stress for Vinyl Sheet Pile

Vinyl sheet piling materials are normally designated with the structural characteristics of cell classification 1-41443-33, meaning they will meet or exceed a minimum tensile strength of 6,500 psi. From Equation 1 above, use this value along with the recommended factor of safety to arrive at the design stress for vinyl sheet piling.

$$\frac{6{,}500\ psi}{2} \cong 3{,}200\ psi$$

Example 2-Vinyl design stress calculation

Although raw materials may vary slightly from manufacturer to manufacturer, vinyl's strength properties remain fairly constant regardless of the blend. If the ASTM cell classification is not known, the same design stress must be used across the board for product comparison. In fact, the US Army Corps of Engineers specifies 3,200 psi, as well, for the design stress of all vinyl sheet piling, regardless of the manufacturer.

Designing for long life

After establishing the proper design stress, long term effects should be considered to determine if this value will yield an acceptable design life. There are many factors that decrease a material's performance over time: fatigue, corrosion, and physical deterioration, for example. Another is creep, the tendency of a body to continually deform over time while held under constant load. While only a major concern at very high temperatures for most metals, creep can affect vinyl at room temperature. It is this phenomenon that is the driving factor in determining the long-term behavior of vinyl sheet piling. Strain is the measure of this deformation and is reported as a percentage change in length. Vinyl formulated to withstand impact like that used in the manufacture of vinyl sheet piling can withstand a maximum strain before failure of 5%. Again, using the methods applied in Equation 1, a safety factor should be applied to this maximum value to arrive at the maximum allowable strain.

$$\frac{5\ \%}{2} = 2.5\ \%$$

Example 3-maximum allowable strain

Fortunately, creep has been thoroughly studied and well documented. In 1962, William Findley began research on the long-term effects of creep on Vinyl. In 1987 Findley published "26-Year Creep and Recovery of Poly (Vinyl Chloride) and Polyethylene." Findley included in his publishing an equation to predict strain due to creep, for any given stress and time period, where ε is strain, t is time, and ε^{o}, ε^{+}, and n are constants.

$$\varepsilon = \varepsilon^{o} + \varepsilon^{+} t^{n}$$

Equation 2- prediction of strain due to creep

Findley's research is far and away the most comprehensive done in this area, and his model has proven to be extremely accurate. His findings are THE authority in the field of creep effects on plastics, and with 26 years of validation, his correlation should be used exclusively to predict long term creep effects on Vinyl.

Using an input stress of 3,200 psi and a maximum strain of 2.5%, a design life of just over 100 years is predicted for Vinyl, further validating the use of 3,200 psi. This relationship between stress and design life is exponential in nature, and a seemingly small increase in design stress will result in a significantly shorter expected life. For example, 3,200 psi results in a service life 30% longer than 3,300 psi (a difference of only 100 psi) and 250% longer than 3,700 psi.

Review

Vinyl is a standard construction material and should be designed with as such. In any structural application, engineers and designers should understand and endorse design methodology, factors of safety, and design values not only for the overall scope of the project, but for product

4501 Circle 75 Parkway, Suite E-5370 Atlanta, GA 30339 USA Phone 866-867-3762 Fax 770-933-8363 International 00+1+770+933+8166

selection as well. Retaining walls constructed with sheet pile, vinyl or otherwise, are no exception.

When all factors are taken into consideration 3,200 psi is the most responsible value to use for the design stress of vinyl sheet pile. CMI has been the leader in vinyl sheet pile since it's inception over 20 years ago and has produced millions of feet of installed sheet pile and over 90% of all vinyl sheet pile presently in the ground. These products and processes have been closely monitored over the years to ensure proper design, safety, and longevity. It is our hope that, with the information presented here, the designer or end user will be able to make a more informed and responsible decision regarding the selection and application of vinyl sheet piling.

4501 Circle 75 Parkway, Suite E-5370 Atlanta, GA 30339 USA Phone 866-867-3762 Fax 770-933-8363 International 00+1+770+933+8166

Deflection of Vinyl Sheet Piling

A CMI Technical White Paper

Michael Yeats
February 2004

Deflection of Vinyl Sheet Piling

Developed specifically for long-term applications, CMI's patented sheet piling designs optimize bending and stiffness performance. In addition to Finite Element Analysis and Full Section Deflection Testing, the Geotechnical and Structures Laboratory of the US Army Corps of Engineers, Engineer Research and Development Center has verified the strength of CMI's sheet piling.

In addition, The U.S. Army Corps of Engineers, in conjunction with CMI, conducted a joint site investigation of over 300,000 square feet of installed sheet pilling ranging in age from new to ten years old that confirms minimal sheet piling deflection when the products are used within their specified limits.

Vinyl sheet piling is an exceptionally ductile material that can withstand extreme amounts of strain and deflection before a loss of strength is observed. Limiting deflections in vinyl sheet piling is therefore a serviceability limit, rather than a design limit. CMI's vinyl sheet pilling has been proven to perform within deflection serviceability limits when the allowable moment capacity of the product is not exceeded by site conditions and loading.

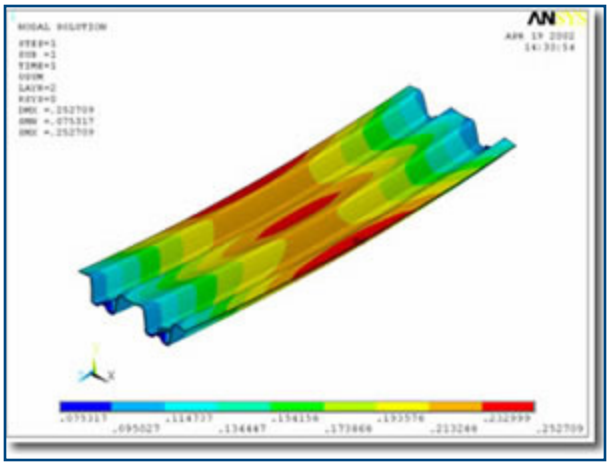

The long-term mechanical properties including strength and stiffness are a function of material capabilities and product design. The materials utilized in our sheet piling are specifically designed for exterior applications and are proven to perform within expected deflection calculations when subjected to standard loading. However, when dealing with geotechnical wall designs and soil loadings, the situation becomes more complicated. Due to the relative flexibility of vinyl sheet piling and changes in soil loading with movement, wall loading can diminish substantially from what is predicted by traditional analysis methods.

In fact, traditional analysis methods can drastically over-predict wall deflections when compared to those actually seen in the field. The majority of the current design tools and methods available today are overly conservative when it comes to predicting deflections of vinyl sheet pile walls. Because of the relative flexibility of vinyl compared to steel and the relaxation of the soils with initial deformations, the actual wall deflections seen in the field and over years of experience are far lower than those predicted using conventional methods.

4501 Circle 75 Parkway, Suite E-5370 Atlanta, GA 30339 USA Phone 886-867-3762 Local 770-933-8166 Fax 770-933-8363